NOTES:

1) STORM WATER MANHOLES ARE PREFABRICATED CONCRETE MANHOLES (SEE SW 3 &4).

2) BACKFILLING OF TRENCHES IN ACCORDANCE WITH SABS 1200 DB.5.6 AND 5.7 AS WELL AS SABS 1200 LB DRAWING LB-1 AND LB-2.

3) STORM WATER PIPES ARE 300mm ø TO 525mm ø, 600mm ø CLASS 75D AND 750mm ø CLASS 50D SPIGOT & SOCKET PIPES.

4) STORM WATER CATCHPITS TO BE CONSTRUCTED IN ACCORDANCE WITH STANDARD DRAWING SW5.

5) SUBSOIL DRAINS AS PER DRAWING SW1.

6) MANHOLE FOR SUBSOIL DRAIN AS PER DRAWING SW5.

LEGEND:

CLASS D100 STORM WATER PIPE (ø SHOWN ON PLAN)

STORM WATER MANHOLE

375mm ø ERF CONNECTION

110mm ø uPVC DRAINAGE PIPE (CORFLO SABS 1601)

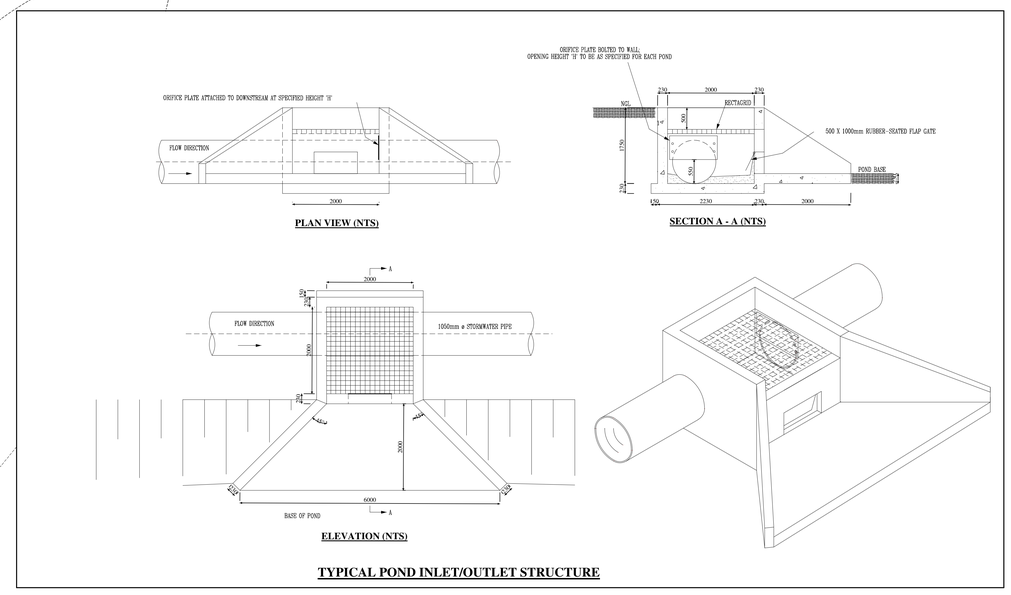

TYPICAL POND INLET/OUTLET STRUCTURE

CHECKED			NAGESIEN
DRAWN	PCM(CAD)	FEB 2009	GETEKEN
DESIGNED	AVDS	FEB 2009	ONTWERP
SURVEYED			OPGEMEET
SURV DISK No			SURV DISK Nr
CAD DISK No			CAD DISK Nr

SCALE AS DRAWN
1 : 500
SKAAL SOOS GETEKEN
SURVEY DATUM
M S L
OPMEET DATUM

100 MM ON ORIGINAL DRAWING

100 MM OP OORSPRONKLIKE TEKENING

ROBERT LESLIE
CONSULTING ENGINEERS - RAADGEWENDE INGENIEURS
10 PINENEEDLE CENTRE
17 MEJ ROTHMAN STREET
PAROW - NORTH
7500
TEL:(021) 930-7354 FAX:(021) 930-4680 E-MAIL : robles@telkomsa.net

F			
E			
D			
C			
B	AMENDMENTS AS PER MUNICIPAL COMMENTS	FEB 2009	H.A. MOSER
A	DESIGN AMENDED TO SUIT REVISED LAYOUT	JAN 2009	H.A. MOSER
	DESCRIPTION BESKRYWING	DATE DATUM	PR. ENG. PR. ING.

AMENDMENTS WYSIGINGS

CLIENT/KLIENT

CONS. ENG./RAADG. IN

H.A. MOSER Pr. ENG.
ECSA REG. NO 730377

PRECIOUS PROSPECT TRADING 168 (PTY) LTD

DEVELOPMENT OF FARM 725/61, KRAAIFONTEIN (BUH-REIN ESTATE)

ROAD & STORM WATER LAYOUT
(SHEET 6 OF 6)

DRAWING NO.
08P/03/09
TEK NR.

AMENDMENTS
A B
WYSIGINGS